Date	2005/03/24
Revision	A

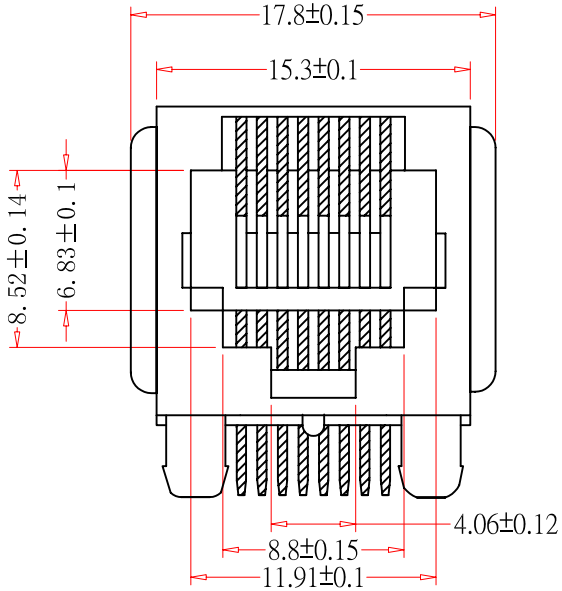

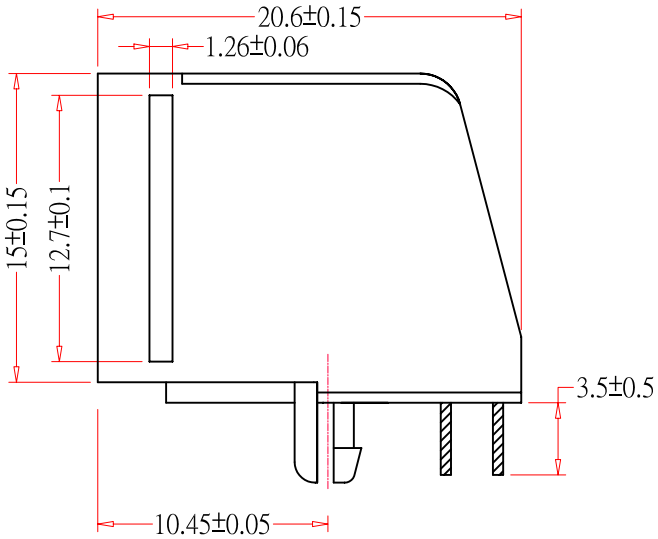

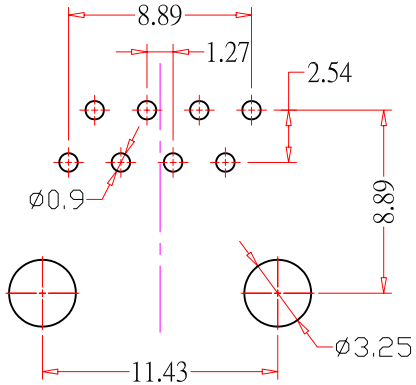

定位板孔位
PCB LAYOUT

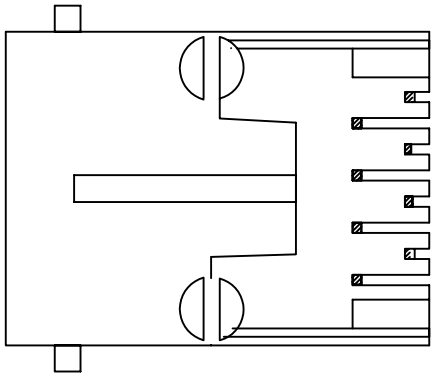

TOLERANCE	
.XXXX	----
.XXX	0.10
.XX	0.25
.X	0.38

P/NO. SY004-8

TECHNICAL DATA			
HOUSING	STANDARD MATERIAL 15% GLASS FILLED PBT UL94V-0	COLOR	GRAY,BLACK
CONTACT	0.35 DIAMETER PHOSPHOR BRONZE GOLD PLATED OVER NICKEL		
GOLD-PLATING	☐ 0.0762 um / 3u inch ☐ 0.15 um / 6u inch ☐ 0.38 um / 15u inch ☐ 0.76 um / 30u inch ☐ 1.27 um / 50u inch		

REV.	DESCRIPTION	ENG.	APPROVAL

ITEM MODULAR PCB JACK	CO. SY	FILE SY004-8
DR. Hansum2005/03/24	APPD.	CHKD.

Shiunn Yang Ent.Co.Ltd.
TEL: 29089890 <REP>
FAX: 29068849,29088679

SCALE /			
UNIT mm		SIZE A4	
SHEET		REV.	