Date	2005/08/09
Revision	A

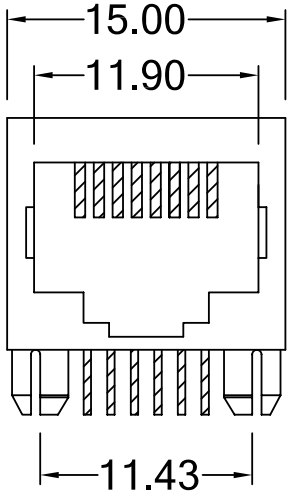

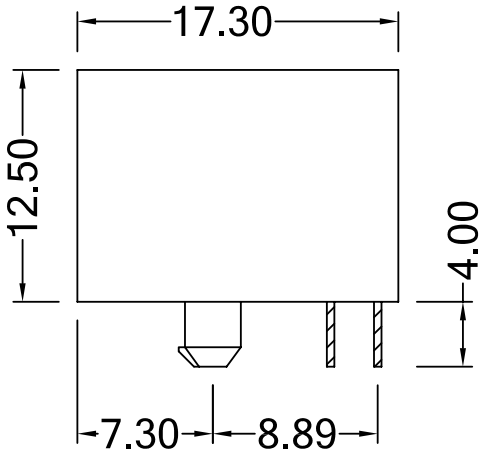

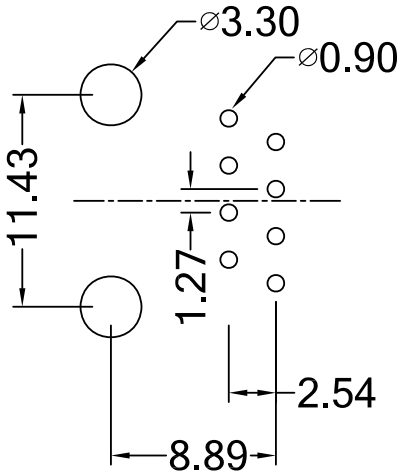

PCB LAYOUT / TOP VIEW

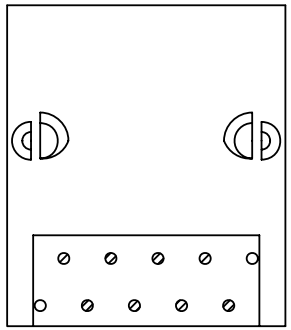

TOLERANCE	
.XXXX	----
.XXX	0.10
.XX	0.25
.X	0.38

P/NO. SY019-8

TECHNICAL DATA			
HOUSING	STANDARD MATERIAL 15% GLASS FILLED PBT UL94V-0	COLOR	GRAY,BLACK
CONTACT	0.35 DIAMETER PHOSPHOR BRONZE GOLD PLATED OVER NICKEL		
GOLD-PLATING	☐ 0.0762 um / 3u inch ☐ 0.15 um / 6u inch ☐ 0.38 um / 15u inch ☐ 0.76 um / 30u inch		
	☐ 1.27 um / 50u inch		

REV.	DESCRIPTION	ENG.	APPROVAL

ITEM MODULAR PCB JACK	CO. SY	FILE SY019-8
DR. Hansum2005/08/09	APPD.	CHKD.
Shiunn Yang Ent.Co.Ltd. TEL: 29089890 <REP> FAX: 29068849,29088679	SCALE /	
	UNIT mm	SIZE A4
	SHEET	REV.